Prepared by: Zach Perkovich
09/02/2025

Pritchard Auto Company | 980 Highway 18 East Britt Iowa | 504238700

2026 F-750 Gas Regular Cab Base (F7A)

Price Level: 615

As Configured Vehicle

Code	Description	MSRP
Base Vehicle		
F7A	Base Vehicle Price (F7A)	$71,880.00
Engines		
99N	7.3L 2V DEVCT NA PFI V8 Gas - 335 HP @ 3750 rpm Torque: 468 ft.lbs. @ 3750 rpm. *468 lb.-ft. torque @ 3750 RPM.*	STD
425	50-State Emissions	N/C
Transmissions		
44P	Ford TorqShift HD 6-Speed Automatic - Double Overdrive, LESS PTO Provision and Tow/Haul	STD
41B	Transmission Power Take-Off Provision w/LiveDrive Capability and Tow/Haul	$295.00
Front Wheels & Tires		
643	Wheels, Front 22.5" x 8.25" White Powder Coated Steel, 10-Hole *(285.75MM BC) hub piloted, flanged nut, metric mount, 8.25 DC rims; with steel hubs.*	STD
T2A	Tires, Front Two 11R22.5H Goodyear Fuel Max RSA (497 rev/mile)	STD
Rear Wheels & Tires		
663	Wheels, Rear 22.5" x 8.25" White Powder Coated Steel, 10-Hole *(285.75MM BC) hub piloted, flanged nut, metric mount, 8.25 DC rims; with steel hubs.*	STD
R2A	Tires, Rear Four 11R22.5H Goodyear Fuel Max RSA (497 rev/mile)	STD
Brakes		
67H	Hydraulic Brake System - Bosch HydroMax w/Traction Control	STD

Prices and content availability as shown are subject to change and should be treated as estimates only. Actual base vehicle, package and option pricing may vary from this estimate because of special local pricing, availability or pricing adjustments not reflected in the dealer's computer system. See salesperson for the most current information.

2026 F-750 Gas Regular Cab Base (F7A)

Price Level: 615

As Configured Vehicle (cont'd)

Code	Description	MSRP
	Full power with automatic adjustment, 4-channel ABS antilock brake system. Includes 12" x 3" (Bosch) DSSA type rear axle mounted parking brake, Orscheln lever control, right of driver and hand operated park brake lever.	
Front Axle and Suspension		
43P	12,000 lb. Cap. Non-Driving - Dana E-1202I - I-Beam Type	$525.00
61E	Taper-Leaf Springs, Parabolic - 13,200 lb. Cap *3-leaf, 62" x 3.15". Also includes, standard duty, dual, double acting shock absorbers.*	$365.00
Rear Axle and Suspension		
475	21,000 lb. Single Reduction - Open - Dana / Spicer 21060S *NOTE: When specifying an axle ratio, check performance guidelines for startability and gradeability.*	STD
68R	Multi-Leaf Springs - 23,000 lb. Cap *For 21,000 lb., 23,000 lb. and 26,000 lb. rear axles. Includes 4,500 lb auxiliary rubber spring.*	$230.00
X6D	6.50 Axle Ratio	N/C
Wheelbase		
200WB	200" Wheelbase/126" CA/75" AF/314" OAL	$490.00
Frame		
539	Single Channel - Straight 'C' 20.11 SM, 120,000 PSI *2,413,200 RBM. Heat treated alloy steel; 10.375" x 3.705" x 0.438" (263.5mm x 94.1mm x 11.1mm).*	$1,075.00
765	Bumper, Front - Full Width, Chrome Plated Steel - (Included in (90E) Exterior Appearance Group)	Included
18D	Special Rating GVWR - Limited to 25,999 lb. GVWR Only available to GAWR combinations that EXCEED 26,000 lbs.	$120.00
86C	Chrome Grille Surround	Included
Exhaust		

Prices and content availability as shown are subject to change and should be treated as estimates only. Actual base vehicle, package and option pricing may vary from this estimate because of special local pricing, availability or pricing adjustments not reflected in the dealer's computer system. See salesperson for the most current information.

2026 F-750 Gas Regular Cab Base (F7A)

Price Level: 615

As Configured Vehicle (cont'd)

Code	Description	MSRP
91H	Single, Horizontal Muffler - Frame Mounted Right Side Back of Cab w/Catalytic Converter *Downward facing, outlet tip.*	STD
Fuel Tanks		
65A	Fuel Tank - LH 50 Gallon - Steel	STD
Electrical / Alternator / Battery		
STDALT	Extra Heavy Duty Alternator - 12-Volt, 210 Amp Mitsubishi *Extra heavy duty 12 Volt.*	Included
55M	Jump Start Stud - Remote Mounted	$90.00
STDBAT	Battery - One 900 CCA, Includes Steel Battery Box *12Volt, Motorcraft.*	STD
59C	Body Builder Wiring - At End of Frame, Combined - (ILO Standard - Back of Cab Combined) *Includes sealed connectors for 2 ground circuits, with combined left/stop, combined right/stop, stop lamps, back up lamps. Also includes 2 additional pass through wires to cab.*	$135.00
61A	Embedded Modem Delete This will be a forced option on all vehicles built on or after July 7, 2025. *Starting with units built on and after July 7, 2025 we will no longer be installing an embedded modem for the rest of the model year production. This is necessary because our modem supplier is exiting the business and cannot supply us parts beyond that date. Due to our unique electrical architecture, we cannot leverage suppliers of other FordPro vehicles, so the decision was made to stop installing modems and continue vehicle production until a new vendor can be identified and a modem developed for next model year. Units built on or after the above effective date will automatically have order code 61A (Embedded Modem Delete) added to the vehicle specs and will receive a credit on the invoice for the loss of modem functionality.*	-$75.00
Seats		
88Y	40/20/40 Fixed Driver & Fixed Passenger w/Unique 20% Fold-Down Console - Vinyl	$420.00
Cab Interior		
600A	Preferred Equipment Package 600A *Includes:* *- Wheel Seals, Front - Oil lubricated, SKF ScotSeal PlusXL Seals*	N/C

Prices and content availability as shown are subject to change and should be treated as estimates only. Actual base vehicle, package and option pricing may vary from this estimate because of special local pricing, availability or pricing adjustments not reflected in the dealer's computer system. See salesperson for the most current information.

2026 F-750 Gas Regular Cab Base (F7A)

Price Level: 615

As Configured Vehicle (cont'd)

Code	Description	MSRP
	- Wheel Seals, Rear - Oil lubricated, SKF ScotSeal PlusXL Seals *- Extra Heavy Duty Alternator - 12-Volt, 210 Amp Mitsubishi Extra heavy duty 12 Volt.* *- Lights - Roof Marker/Clearance - Amber Lenses, 5 Lights* *- Tow Hooks, Front (2) - Frame-Mounted, Painted Black* *- Floor Covering - Black Vinyl* *- Intelligent Oil Life Monitor* *- Steering Column - Tilt / Telescoping* *- Steering Wheel - Black PVC w/Integral Cruise Control Switches, includes Audio Controls*	
90P	Power Equipment Group - (Included in (90A) Appearance Group) *Includes power front side windows, power door locks and door trim panel.* *Includes:* *- Remote Keyless Entry*	$580.00
59F	Four Body Builder Switches - Mounted in Center Instrument Panel *With connector access located in engine compartment. Amperages vary by switch: 10, 15, 25, 25.*	$125.00
55P	110 A/C Outlet - in Lower Center Finish Panel	$100.00
588	Radio: AM/FM Stereo w/2 Speakers, USB input, Clock Display and Bluetooth	STD
Cab Exterior		
90E	Exterior Appearance Group *Includes:* *- Bumper, Front - Full Width, Chrome Plated Steel - (Included in (90E) Exterior Appearance Group)* *- Chromed Fender Badge* *- Chrome Grille Surround*	$730.00
54M	Mirrors, Dual - Heated Rectangular, XL2020 - 96" Width *Integral mirror, sail type, manual fold, solid black finish.*	STD
Miscellaneous		
PAINT	Paint Type - Environmentally Friendly, "3 - Wet System"	STD
Fleet Options		
B4A	Net Invoice Fleet Option	$0.00
56A	CPA Fleet Incentive	N/C

Prices and content availability as shown are subject to change and should be treated as estimates only. Actual base vehicle, package and option pricing may vary from this estimate because of special local pricing, availability or pricing adjustments not reflected in the dealer's computer system. See salesperson for the most current information.

2026 F-750 Gas Regular Cab Base (F7A)

Price Level: 615

As Configured Vehicle (cont'd)

Code	Description	MSRP
Exterior Color		
YZ_01	Oxford White	N/C
Interior Color		
E_01	Gray	N/C
SUBTOTAL		$77,085.00
Fuel Charge (12)		$0.00
Destination Charge		$2,495.00
TOTAL		$79,580.00

Prices and content availability as shown are subject to change and should be treated as estimates only. Actual base vehicle, package and option pricing may vary from this estimate because of special local pricing, availability or pricing adjustments not reflected in the dealer's computer system. See salesperson for the most current information.

2026 F-750 Gas Regular Cab Base (F7A)

Price Level: 615

Available Options

Selected	Code	Description	MSRP
General Info			
☐	ORDER1	Initial Order Date: 10/15/2024	N/C
Engines			
☑	99N	7.3L 2V DEVCT NA PFI V8 Gas - 335 HP @ 3750 rpm Torque: 468 ft.lbs. @ 3750 rpm. *468 lb.-ft. torque @ 3750 RPM.*	STD
☑	425	50-State Emissions	N/C
☐	41H	Engine Block Heater, Phillips, 120 Volt/750 Watt	$60.00
☐	98G	Gaseous Fuel Prep Pack *CNG/LPG Engine Prep. Includes hardened engine valve seats. NOTE: This package DOES NOT include CNG/LPG fuel tanks, lines, etc. Vehicle will be equipped with the standard factory gasoline fuel system. Additional equipment combined with a Certified calibration reflash is required, from an external upfitter, to convert the vehicle to a CNG/LPG fueled vehicle.*	$365.00
☐	916	Speed Limit - 65mph	N/C
☐	917	Speed Limit - 70mph	N/C
☐	94A	Engine Idle Shutdown Timer - 5 Minutes	$25.00
☐	94B	Engine Idle Shutdown Timer - 10 Minutes	$25.00
☐	94C	Engine Idle Shutdown Timer - 15 Minutes	$25.00

Prices and content availability as shown are subject to change and should be treated as estimates only. Actual base vehicle, package and option pricing may vary from this estimate because of special local pricing, availability or pricing adjustments not reflected in the dealer's computer system. See salesperson for the most current information.

2026 F-750 Gas Regular Cab Base (F7A)

Price Level: 615

Available Options (cont'd)

Selected	Code	Description	MSRP
☐	94D	Engine Idle Shutdown Timer - 20 Minutes	$25.00
Transmissions			
☑	44P	Ford TorqShift HD 6-Speed Automatic - Double Overdrive, LESS PTO Provision and Tow/Haul	STD
☑	41B	Transmission Power Take-Off Provision w/LiveDrive Capability and Tow/Haul	$295.00
Front Wheels & Tires			
☑	643	Wheels, Front 22.5" x 8.25" White Powder Coated Steel, 10-Hole *(285.75MM BC) hub piloted, flanged nut, metric mount, 8.25 DC rims; with steel hubs.*	STD
☐	64H	Wheels, Front 22.5" x 8.25" Aluminum, 10-Hole Alcoa Bright Polished w/Dura-Bright Seal on Both Sides	$735.00
☐	649	Wheels, Front 22.5" x 8.25" Black Wheel *(285.75MM BC) hub piloted, flanged nut, metric mount, 8.25 DC rims; with steel hubs.*	$60.00
☑	T2A	Tires, Front Two 11R22.5H Goodyear Fuel Max RSA (497 rev/mile)	STD
☐	T2E	Tires, Front Two 11R22.5H Michelin X Multi Energy Z (501 rev/mile)	$240.00
☐	TCH	Tires, Front Two 255/70R22.5H Goodyear Endurance RSA (566 rev/mile)	$40.00

Prices and content availability as shown are subject to change and should be treated as estimates only. Actual base vehicle, package and option pricing may vary from this estimate because of special local pricing, availability or pricing adjustments not reflected in the dealer's computer system. See salesperson for the most current information.

2026 F-750 Gas Regular Cab Base (F7A)

Price Level: 615

Available Options (cont'd)

Selected	Code	Description	MSRP
☐	T2M	Tires, Front Two 275/80R22.5H Michelin X Multi Energy Z (515 rev/mile)	$190.00
☐	TRA	Tires, Front Two 295/75R22.5H Continental HSR3 (514 rev/mile)	$130.00

Rear Wheels & Tires

☑	663	Wheels, Rear 22.5" x 8.25" White Powder Coated Steel, 10-Hole *(285.75MM BC) hub piloted, flanged nut, metric mount, 8.25 DC rims; with steel hubs.*	STD
☐	66H	Wheels, Rear 22.5" x 8.25" Aluminum, 10-Hole Alcoa Bright Polished w/Dura-Bright Seal on Both Sides *Inner wheel is white powder-coated steel.*	$830.00
☐	66C	Wheels, Rear 22.5" x 8.25" Aluminum, 10-Hole Alcoa Bright Polished w/Dura-Bright Seal on Both Sides *Inner wheel is aluminum.*	$1,470.00
☐	669	Wheels, Rear 22.5" x 8.25" Black Wheel *(285.75MM BC) hub piloted, flanged nut, metric mount, 8.25 DC rims; with steel hubs.*	$120.00
☐	60Z	Wheel, Spare 22.5" x 8.25" White Powder Coated Steel, 10-Hole - Quantity (One only)	$145.00
☑	R2A	Tires, Rear Four 11R22.5H Goodyear Fuel Max RSA (497 rev/mile)	STD
☐	R2H	Tires, Rear Four 11R22.5H Goodyear Fuel Max RTD (493 rev/mile)	$175.00

Prices and content availability as shown are subject to change and should be treated as estimates only. Actual base vehicle, package and option pricing may vary from this estimate because of special local pricing, availability or pricing adjustments not reflected in the dealer's computer system. See salesperson for the most current information.

2026 F-750 Gas Regular Cab Base (F7A)

Price Level: 615

Available Options (cont'd)

Selected	Code	Description	MSRP
☐	R2E	Tires, Rear Four 11R22.5H Michelin X Multi Energy Z (501 rev/mile)	$480.00
☐	RMB	Tires, Rear Four 11R22.5H Michelin X Multi D (494 rev/mile)	$405.00
☐	R2K	Tires, Rear Four 255/70R22.5H Goodyear Fuel Max RTD (563 rev/mile)	$140.00
☐	RCH	Tires, Rear Four 255/70R22.5H Goodyear Fuel Max RSA (563 rev/mile)	$80.00
☐	R2J	Tires, Rear Four 275/80R22.5H Michelin X Multi Energy D (514 rev/mile)	$265.00
☐	R2M	Tires, Rear Four 275/80R22.5H Michelin X Multi Energy Z (515 rev/mile)	$375.00
☐	RRD	Tires, Rear Four 295/75R22.5H Continental HDR2 ECO PLUS (514 rev/mile)	$310.00
☐	RRA	Tires, Rear Four 295/75R22.5H Continental HSR3 (514 rev/mile)	$260.00

Brakes

☑	67H	Hydraulic Brake System - Bosch HydroMax w/Traction Control	STD
		Full power with automatic adjustment, 4-channel ABS antilock brake system. Includes 12" x 3" (Bosch) DSSA type rear axle mounted parking brake, Orscheln lever control, right of driver and hand operated park brake lever.	
☐	18A	Electronic Stability Control DELETE	-$115.00
		Deletes the standard ESC feature.	

Prices and content availability as shown are subject to change and should be treated as estimates only. Actual base vehicle, package and option pricing may vary from this estimate because of special local pricing, availability or pricing adjustments not reflected in the dealer's computer system. See salesperson for the most current information.

2026 F-750 Gas Regular Cab Base (F7A)

Price Level: 615

Available Options (cont'd)

Selected	Code	Description	MSRP
☐	152	Trailer Connection Socket - 7-Way, Wired for Turn Signals Combined with Stop *Mounted at rear of frame, for combined trailer stop, tail, turn, marker light circuits. Includes electric trailer brake accommodation package with cab connections for mounting customer installed electric brake unit.*	$100.00
☐	154	Trailer Connection Socket - 7-Way, Wired for Turn Signals, Separate of Stop *Mounted at rear of frame, for separate trailer stop, tail, turn, marker light circuits. Includes electric trailer brake accommodation package with cab connections for mounting customer installed electric brake unit.*	$100.00

Front Axle and Suspension

☐	43N	10,000 lb. Cap. Non-Driving - Dana E-1002I - I-Beam Type	STD
☑	43P	12,000 lb. Cap. Non-Driving - Dana E-1202I - I-Beam Type	$525.00
☐	61C	Taper-Leaf Springs, Parabolic - 10,000 lb. Cap *2-leaf, 62" x 3.15". Also includes, standard duty, dual, double acting shock absorbers.*	STD
☐	61D	Taper-Leaf Springs, Parabolic - 12,000 lb. Cap *2-leaf, 62" x 3.15". Also includes, standard duty, dual, double acting shock absorbers.*	$305.00
☑	61E	Taper-Leaf Springs, Parabolic - 13,200 lb. Cap *3-leaf, 62" x 3.15". Also includes, standard duty, dual, double acting shock absorbers.*	$365.00
☐	15S	Front Stabilizer Bar	$490.00
☐	60A	Lube, Front Axle, EmGard 50W, Synthetic Oil	$50.00

Prices and content availability as shown are subject to change and should be treated as estimates only. Actual base vehicle, package and option pricing may vary from this estimate because of special local pricing, availability or pricing adjustments not reflected in the dealer's computer system. See salesperson for the most current information.

2026 F-750 Gas Regular Cab Base (F7A)

Price Level: 615

Available Options (cont'd)

Selected	Code	Description	MSRP
Rear Axle and Suspension			
☑	475	21,000 lb. Single Reduction - Open - Dana / Spicer 21060S *NOTE: When specifying an axle ratio, check performance guidelines for startability and gradeability.*	STD
☐	68P	Multi-Leaf Springs - 21,000 lb. Cap *For 19,000 lb. and 21,000 lb. rear axles. Includes 4,500 lb auxiliary rubber spring.*	STD
☑	68R	Multi-Leaf Springs - 23,000 lb. Cap *For 21,000 lb., 23,000 lb. and 26,000 lb. rear axles. Includes 4,500 lb auxiliary rubber spring.*	$230.00
☐	961	Shock Absorbers, Rear - Double Acting	$165.00
☐	607	Lube, Rear Axle, EmGard 75W-90, Synthetic Oil	$100.00
☐	X6B	6.17 Axle Ratio	N/C
☑	X6D	6.50 Axle Ratio	N/C
☐	X7A	7.17 Axle Ratio	N/C
Wheelbase			
☐	158WB	158" Wheelbase/84" CA/49" AF/246" OAL	STD
☐	176WB	176" Wheelbase/102" CA/70" AF/285" OAL	$125.00
☐	182WB	182" Wheelbase/108" CA/70" AF/291" OAL	$210.00

Prices and content availability as shown are subject to change and should be treated as estimates only. Actual base vehicle, package and option pricing may vary from this estimate because of special local pricing, availability or pricing adjustments not reflected in the dealer's computer system. See salesperson for the most current information.

2026 F-750 Gas Regular Cab Base (F7A)

Price Level: 615

Available Options (cont'd)

Selected	Code	Description	MSRP
☐	194WB	194" Wheelbase/120" CA/75" AF/308" OAL	$325.00
☑	200WB	200" Wheelbase/126" CA/75" AF/314" OAL	$490.00
☐	212WB	212" Wheelbase/138" CA/81" AF/332" OAL	$515.00
☐	218WB	218" Wheelbase/144" CA/81" AF/338" OAL	$550.00
☐	224WB	224" Wheelbase/150" CA/87" AF/350" OAL	$570.00
☐	230WB	230" Wheelbase/156" CA/87" AF/356" OAL	$585.00
☐	242WB	242" Wheelbase/168" CA/100" AF/381" OAL	$805.00
☐	260WB	260" Wheelbase/186" CA/120" AF/419" OAL	$965.00
☐	281WB	281" Wheelbase/207" CA/120" AF/440" OAL	$1,150.00

Frame

☐	535	Single Channel - Straight 'C' 15.14 SM, 80,000 PSI *1,211,200 RBM. High strength low alloy steel. 10.250" x 3.092" x 0.375" (260.4mm x 78.5mm x 9.5mm). Includes:* *- GVWR Limit: 37,000 lbs.*	STD

Prices and content availability as shown are subject to change and should be treated as estimates only. Actual base vehicle, package and option pricing may vary from this estimate because of special local pricing, availability or pricing adjustments not reflected in the dealer's computer system. See salesperson for the most current information.

2026 F-750 Gas Regular Cab Base (F7A)

Price Level: 615

Available Options (cont'd)

Selected	Code	Description	MSRP
☐	536	Single Channel - Straight 'C' 14.18 SM, 120,000 PSI *1,701,600 RBM. Heat treated alloy steel; 10.125" x 3.580" x 0.312" (257.2mm x 90.9mm x 8.0mm).*	$365.00
☐	538	Single Channel - Straight 'C' 16.98 SM, 120,000 PSI *2,037,600 RBM. Heat treated alloy steel; 10.250" x 3.610" x 0.375" (260.4mm x 91.66mm x 9.5mm).*	$650.00
☑	539	Single Channel - Straight 'C' 20.11 SM, 120,000 PSI *2,413,200 RBM. Heat treated alloy steel; 10.375" x 3.705" x 0.438" (263.5mm x 94.1mm x 11.1mm).*	$1,075.00
☐	19C	Frame Rail Drilling - Factory Pre-Drilled Holes in Frame Rails *Supports special fuel tanks for a Roush CNG/LPG Gaseous Prep conversion. Saves time, cost, transportation while providing accuracy for the mount.*	$150.00
☐	41R	Outer "C" Channel Reinforcement - 120,000 PSI *29.84 SM; 3,580,800 RBM. Heat treated alloy steel; 10.813" x 3.892" x 0.312"; (274.6 mm x 98.9 mm x 8.0 mm).*	$1,160.00
☐	532	Frame Extension, Front - Integral 20" In Front of Grille *Includes:* *- Grille, Fixed - Black/Gray* *- Bumper, Front - Delete - Also Deletes Mounting Brackets*	$490.00
☑	765	Bumper, Front - Full Width, Chrome Plated Steel - (Included in (90E) Exterior Appearance Group)	$490.00
☐	76X	Bumper, Front - Delete - Also Deletes Mounting Brackets	-$135.00
☐	76F	3" Front Bumper Extension	$175.00
☐	76Y	Tow Hooks - Delete	-$70.00

Prices and content availability as shown are subject to change and should be treated as estimates only. Actual base vehicle, package and option pricing may vary from this estimate because of special local pricing, availability or pricing adjustments not reflected in the dealer's computer system. See salesperson for the most current information.

2026 F-750 Gas Regular Cab Base (F7A)

Price Level: 615

Available Options (cont'd)

Selected	Code	Description	MSRP
☑	18D	Special Rating GVWR - Limited to 25,999 lb. GVWR Only available to GAWR combinations that EXCEED 26,000 lbs.	$120.00
☑	86C	Chrome Grille Surround	$245.00
☐	86B	Grille, Fixed - Black/Gray	$125.00
Exhaust			
☑	91H *Downward facing, outlet tip.*	Single, Horizontal Muffler - Frame Mounted Right Side Back of Cab w/Catalytic Converter	STD
Fuel Tanks			
☑	65A	Fuel Tank - LH 50 Gallon - Steel	STD
☐	65D	Fuel Tank - LH 60 Gallon - Steel	$250.00
Electrical / Alternator / Battery			
☑	STDALT *Extra heavy duty 12 Volt.*	Extra Heavy Duty Alternator - 12-Volt, 210 Amp Mitsubishi	STD
☐	17B	Dual Heavy Duty Alternators - 397 Amp Capacity - 240 & 157 amp	$880.00
☐	17E *Extra heavy duty 12 Volt.*	240 Amp Alternator	$410.00
☑	55M	Jump Start Stud - Remote Mounted	$90.00

Prices and content availability as shown are subject to change and should be treated as estimates only. Actual base vehicle, package and option pricing may vary from this estimate because of special local pricing, availability or pricing adjustments not reflected in the dealer's computer system. See salesperson for the most current information.

2026 F-750 Gas Regular Cab Base (F7A)

Price Level: 615

Available Options (cont'd)

Selected	Code	Description	MSRP
☑	STDBAT *12Volt, Motorcraft.*	Battery - One 900 CCA, Includes Steel Battery Box	STD
☐	63B *12Volt, Motorcraft.*	Battery - Two 900 CCA, 1800 Total, Includes Steel Battery Box	$60.00
☐	164	Roof Marker/Clearance Lights - Clear Lenses, 5 Lights (Replaces Standard Amber Lenses)	$30.00
☐	55X *Deletes stop, turn, tail and backup lights. Does not omit cable harness to end of frame.*	Tail Light Delete	N/C
☑	59C *Includes sealed connectors for 2 ground circuits, with combined left/stop, combined right/stop, stop lamps, back up lamps. Also includes 2 additional pass through wires to cab.*	Body Builder Wiring - At End of Frame, Combined - (ILO Standard - Back of Cab Combined)	$135.00
☐	59D *Includes sealed connectors for 2 ground circuits, with separate left/stop, separate right/stop, stop lamps, back up lamps. Also includes 2 additional pass through wires to cab.*	Body Builder Wiring - At Back of Cab, Separate - (ILO Standard - Back of Cab Combined)	$70.00
☐	59E *Includes sealed connectors for 2 ground circuits, with separate left/stop, separate right/stop, stop lamps, back up lamps. Also includes 2 additional pass through wires to cab.*	Body Builder Wiring - At End of Frame, Separate - (ILO Standard - Back of Cab Combined)	$135.00
☐	17M	Back-Up Alarm - Electric, 102 dBA	$110.00
☐	962	Daytime Running Lamps (Not Configurable)	$25.00

Prices and content availability as shown are subject to change and should be treated as estimates only. Actual base vehicle, package and option pricing may vary from this estimate because of special local pricing, availability or pricing adjustments not reflected in the dealer's computer system. See salesperson for the most current information.

2026 F-750 Gas Regular Cab Base (F7A)

Price Level: 615

Available Options (cont'd)

Selected	Code	Description	MSRP
☐	16V *Available in message center.*	Voltmeter	$100.00
☐	86M	Vehicle Integration System 1.0	$320.00
☑	61A	Embedded Modem Delete	-$75.00

This will be a forced option on all vehicles built on or after July 7, 2025.

Starting with units built on and after July 7, 2025 we will no longer be installing an embedded modem for the rest of the model year production. This is necessary because our modem supplier is exiting the business and cannot supply us parts beyond that date. Due to our unique electrical architecture, we cannot leverage suppliers of other FordPro vehicles, so the decision was made to stop installing modems and continue vehicle production until a new vendor can be identified and a modem developed for next model year. Units built on or after the above effective date will automatically have order code 61A (Embedded Modem Delete) added to the vehicle specs and will receive a credit on the invoice for the loss of modem functionality.

Seats

☐	88A	30/0/30 Fixed Driver & Fixed Passenger w/Consolette - Vinyl	STD
☐	88B	30/0/30 Fixed Driver & Fixed Passenger w/Consolette - Cloth	$125.00
☐	881	30/70 Fixed Driver & Fixed 2-Passenger Bench - Vinyl	$350.00
☐	882	30/70 Fixed Driver & Fixed 2-Passenger Bench - Cloth	$475.00
☐	88R	30/0/30 Air Ride Driver (Integral Air Pump) & Fixed Passenger w/Consolette - Vinyl	$440.00
☐	88S	30/0/30 Air Ride Driver (Integral Air Pump) & Fixed Passenger w/Consolette - Cloth	$565.00

Prices and content availability as shown are subject to change and should be treated as estimates only. Actual base vehicle, package and option pricing may vary from this estimate because of special local pricing, availability or pricing adjustments not reflected in the dealer's computer system. See salesperson for the most current information.

2026 F-750 Gas Regular Cab Base (F7A)

Price Level: 615

Available Options (cont'd)

Selected	Code	Description	MSRP
☐	88J	30/0/30 Air Ride Driver (Integral Air Pump) & Air Ride Passenger (Integral Air Pump) w/Consolette - Vinyl	$855.00
☐	88K	30/0/30 Air Ride Driver (Integral Air Pump) & Air Ride Passenger (Integral Air Pump) w/Consolette - Cloth	$980.00
☐	88L	30/70 Air Ride Driver (Integral Air Pump) & Fixed 2-Passenger Bench - Vinyl	$440.00
☐	88M	30/70 Air Ride Driver (Integral Air Pump) & Fixed 2-Passenger Bench - Cloth	$565.00
☑	88Y	40/20/40 Fixed Driver & Fixed Passenger w/Unique 20% Fold-Down Console - Vinyl	$420.00
☐	88Z	40/20/40 Fixed Driver & Fixed Passenger w/Unique 20% Fold-Down Console - Cloth	$545.00

Cab Interior

☑	600A	Preferred Equipment Package 600A	N/C

Includes:
- Bumper, Front - Black, Full Width
- Wheel Seals, Front - Oil lubricated, SKF ScotSeal PlusXL Seals
- Wheel Seals, Rear - Oil lubricated, SKF ScotSeal PlusXL Seals
- Extra Heavy Duty Alternator - 12-Volt, 210 Amp Mitsubishi
Extra heavy duty 12 Volt.
- Painted Grille - Plastic
- Lights - Roof Marker/Clearance - Amber Lenses, 5 Lights
- Tow Hooks, Front (2) - Frame-Mounted, Painted Black
- Floor Covering - Black Vinyl
- Intelligent Oil Life Monitor
- Steering Column - Tilt / Telescoping
- Steering Wheel - Black PVC w/Integral Cruise Control Switches, includes Audio Controls
- Body Builder Wiring - At Back of Cab, Combined

Prices and content availability as shown are subject to change and should be treated as estimates only. Actual base vehicle, package and option pricing may vary from this estimate because of special local pricing, availability or pricing adjustments not reflected in the dealer's computer system. See salesperson for the most current information.

2026 F-750 Gas Regular Cab Base (F7A)

Price Level: 615

Available Options (cont'd)

Selected	Code	Description	MSRP
		Includes sealed connectors for 2 ground circuits, with combined left/stop, combined right/stop, stop lamps, park lamps, back up lamps. Also includes 2 additional pass through wires to cab.	
☐	87H	Driver Assist Technology Package. Hydraulic Brake *Includes Autonomous Emergency Braking, Forward Collision Warning, Lane Departure Warning and Auto High Beam Control.* *Includes:* *- Enhanced Cluster w/High-Level 8-Inch Display* *Electronic speedometer (MPH/KPH) includes oil pressure, coolant temperature, fuel gauge, tachometer and indicator lights. Also included is enhanced 3-button Message Center with odometer, trip odometer, distance to empty for fuel, average fuel economy, hour meter, and warning messages. Transmission temperature in message center.*	$1,410.00
☐	61M	Rear View Camera w/Mirror Display *Rear view mirror video with full length display included in kit. To be installed by Upfitter.*	$560.00
☐	90A	Appearance Group *Includes front-mounted overhead console with dual sunglass bins and integral front map reading lights.* *Includes:* *- Chrome Trimmed Air Registers w/Positive Shut-Off* *- Power Equipment Group - (Included in (90A) Appearance Group)* *Includes power front side windows, power door locks and door trim panel.* *- Remote Keyless Entry*	$815.00
☐	92K	Enhanced Cluster w/High-Level 8-Inch Display *Electronic speedometer (MPH/KPH) includes oil pressure, coolant temperature, fuel gauge, tachometer and indicator lights. Also included is enhanced 3-button Message Center with odometer, trip odometer, distance to empty for fuel, average fuel economy, hour meter, and warning messages. Transmission temperature in message center.*	$235.00
☑	90P	Power Equipment Group - (Included in (90A) Appearance Group) *Includes power front side windows, power door locks and door trim panel.* *Includes:* *- Remote Keyless Entry*	$580.00
☑	59F	Four Body Builder Switches - Mounted in Center Instrument Panel *With connector access located in engine compartment. Amperages vary by switch: 10, 15, 25, 25.*	$125.00
☐	96C	Pull Out Cup Holder For Two Cups - Instrument Panel Mounted	$30.00

Prices and content availability as shown are subject to change and should be treated as estimates only. Actual base vehicle, package and option pricing may vary from this estimate because of special local pricing, availability or pricing adjustments not reflected in the dealer's computer system. See salesperson for the most current information.

2026 F-750 Gas Regular Cab Base (F7A)

Price Level: 615

Available Options (cont'd)

Selected	Code	Description	MSRP
☑	55P	110 A/C Outlet - in Lower Center Finish Panel	$100.00
☐	214	4 Speaker Option for 588 Radio	$30.00
☐	58B	Radio Delete Package *Deletes radio, speakers, antenna and antenna cable. Includes radio instrument panel cover and aux audio jack cover and speaker locations for future radio upfit if owner desires.*	-$60.00
☑	588	Radio: AM/FM Stereo w/2 Speakers, USB input, Clock Display and Bluetooth	STD
☐	85B	Keyed Alike - Not Available with Anti-Theft System, Requires Multiple-Unit Order	$45.00
☐	85L	Keyed Alike - Option 1 - Not Available with Anti-Theft System, Requires Multiple-Unit Order	$45.00
☐	85M	Keyed Alike - Option 2 - Not Available with Anti-Theft System, Requires Multiple-Unit Order	$45.00
☐	85N	Keyed Alike - Option 3 - Not Available with Anti-Theft System, Requires Multiple-Unit Order	$45.00
☐	85P	Keyed Alike - Option 4 - Not Available with Anti-Theft System, Requires Multiple-Unit Order	$45.00
☐	90M	Interior Rear View Mirror	$75.00

Cab Exterior

Prices and content availability as shown are subject to change and should be treated as estimates only. Actual base vehicle, package and option pricing may vary from this estimate because of special local pricing, availability or pricing adjustments not reflected in the dealer's computer system. See salesperson for the most current information.

2026 F-750 Gas Regular Cab Base (F7A)

Price Level: 615

Available Options (cont'd)

Selected	Code	Description	MSRP
☑	90E	Exterior Appearance Group *Includes:* *- Bumper, Front - Full Width, Chrome Plated Steel - (Included in (90E) Exterior Appearance Group)* *- Chromed Fender Badge* *- Chrome Grille Surround*	$730.00
☐	94T	Tamper-Proof Odometer	$30.00
☑	54M	Mirrors, Dual - Heated Rectangular, XL2020 - 96" Width *Integral mirror, sail type, manual fold, solid black finish.*	STD
☐	54P	Mirrors, Dual - Heated & Motorized Rectangular, XL2020 - 96" Width *Integral spot mirror, sail type, solid black finish.*	$185.00
☐	54A	Mirrors, Dual - Heated & Motorized Rectangular, XL2020 - 96" Width w/Chrome Cap *Integral spot mirror, sail type.*	$245.00
☐	54C	Mirrors, Dual - Heated Rectangular, XL2020 - 102" Width *Integral spot mirror, sail type, manual fold, solid black finish.*	$30.00
☐	54R	Mirrors, Dual - Heated & Motorized Rectangular, XL2020 - 102" Width *Integral spot mirror, sail type, solid black finish.*	$215.00
☐	54K	Mirrors, Dual - Heated & Motorized Rectangular, XL2020 - 102" Width w/Chrome Cap *Integral spot mirror, sail type.*	$275.00
☐	54F	Mirrors, Trailer Tow, Powered - Sail Mount - w/Power Telescoping & Power Folding *Includes power heated glass, heated convex spotter and integrated clearance lights/turn signals. Heat controls dash mounted.*	$365.00

Prices and content availability as shown are subject to change and should be treated as estimates only. Actual base vehicle, package and option pricing may vary from this estimate because of special local pricing, availability or pricing adjustments not reflected in the dealer's computer system. See salesperson for the most current information.

2026 F-750 Gas Regular Cab Base (F7A)

Price Level: 615

Available Options (cont'd)

Selected	Code	Description	MSRP
☐	63F	Aux Spot Mirrors - Front Fender Mounted - (2) Driver Side and Passenger Side	$285.00
☐	63G	Aux Spot Mirror - Front Fender Mounted - (1) Passenger Side Only	$180.00
☐	165	Mud Flap Holder Without Flaps	$95.00
☐	166	Mud Flap Holder With Flaps	$155.00

Ship-Thru

☐	21A	Pre-Delivery Inspection	N/C
	Selection requires that you also choose either (314) or (31F) or (31T) or (31S) or (31Y) to have the Inspection performed. Required with any final Ship-To that is not a dealer.		
☐	314	Ship-Thru - Manning	$0.00
	MAY be selected w/o adding (21A). For MODIFICATIONS ONLY, Dealer must make arrangements directly with Manning (please use CVT Resources for add. Info).		
☐	31F	Ship-Thru - NFS National Fleet Services	$0.00
	MAY be selected w/o adding (21A). For MODIFICATIONS ONLY, Dealer must make arrangements directly with NFS (please use CVT Resources for add. Info).		
☐	31S	Ship-Thru: Roush CleanTech	$0.00
	MAY be selected w/o adding (21A). For MODIFICATIONS ONLY, Dealer must make arrangements directly with Roush (please use CVT Resources for add. Info).		
☐	31Y	Ship-Thru: Zoresco Equipment	$0.00
	MAY be selected w/o adding (21A). For MODIFICATIONS ONLY, Dealer must make arrangements directly with Zoresco (please use CVT Resources for add. Info).		

Prices and content availability as shown are subject to change and should be treated as estimates only. Actual base vehicle, package and option pricing may vary from this estimate because of special local pricing, availability or pricing adjustments not reflected in the dealer's computer system. See salesperson for the most current information.

2026 F-750 Gas Regular Cab Base (F7A)

Price Level: 615

Available Options (cont'd)

Selected	Code	Description	MSRP
Miscellaneous			
☑	PAINT	Paint Type - Environmentally Friendly, "3 - Wet System"	STD
☐	79V	COV Required	N/C
	Send a paper Certificate of Origin for a Vehicle (COV) for those states that file electronically - CA or MI.		
Fleet Options			
☐	19B	Beverage Delivery Package	$60.00
	Includes body builder wiring at back of cab at frame, sealed connectors for 2 ground circuits, with combined left/stop, combined right/stop, stop lamps, park lamps, back up lamps, also includes 2 additional pass through wires to cab with 6 feet additional length to accommodate drop frame beverage body application.		
☑	B4A	Net Invoice Fleet Option	$0.00
☑	56A	CPA Fleet Incentive	N/C
☐	56B	Commercial Repurchase	N/C
☐	56F	FRCS Long Term	N/C
☐	56K	Long Term Fleet Incentive	$0.00
☐	56M	National Fleet Incentive	$0.00
☐	56Y	DDR Program	N/C
☐	FLADCR	Fleet Special Adjustment Credit	$0.00
☐	55D	Driver Assistance - FLEET SETTINGS	$35.00
	Requires Valid Code.		

Prices and content availability as shown are subject to change and should be treated as estimates only. Actual base vehicle, package and option pricing may vary from this estimate because of special local pricing, availability or pricing adjustments not reflected in the dealer's computer system. See salesperson for the most current information.

2026 F-750 Gas Regular Cab Base (F7A)

Price Level: 615

Available Options (cont'd)

Selected	Code	Description	MSRP
		Note: Settings are locked and cannot be changed by driver or fleet administrator. Includes driver alert set to ON, collision assist - alert sensitivity set to NORMAL, distance indication is set to ON, active braking set to ON, pre collision warning set to ON, lane keeping set to ON, sensitivity set to NORMAL, auto lamp delay set to 20 sec, auto high beam set to ON and daytime lights set to ON.	
☐	87S	Fleet Safety Kit *Includes 5 lb fire extinguisher class A, B and C with mounting brackets, triangle reflector and vehicle fuse kit (shipped loose not installed at plant).*	$205.00

VSO Options

☐	SP101	VSO - Monotone Special Paint (Minimum Quantity 5)	$1,039.00
☐	SPF	VSO - Special Paint Formulation (Minimum Quantity 5)	$1,276.00
☐	HFH	VSO SPO Code	N/C
☐	IHD	VSO Hold Code This is to put an order on a VSO Hold, so that it does not get scheduled until the VSO dept. releases it.	N/C
☐	FCF	VSO - 100 AF 230 WB w/TT F7A 026 *This option releases 230 inch WB 100 inch AF with trailer tow.*	$583.00
☐	FCK	VSO - 100 AF 230 WB w/TT NO ESC 026 *This option releases 230 inch WB 100 inch AF with trailer tow, ESC delete.*	$1,851.00
☐	FBZ	VSO - 100 IN AF 200 WB F7D 026 *200 inch WB with 100 inch AF with hydraulic brakes.*	$710.00
☐	FBX	VSO - 112 AF 260 WB 026 MD *This option releases a 112 inch AF on a 260 inch wheelbase, 535 straight frame with tail light delete 55X.*	$59.00
☐	HGE	VSO - 14K FRT AXLE F750 026 200 LESS	$1,230.00

Prices and content availability as shown are subject to change and should be treated as estimates only. Actual base vehicle, package and option pricing may vary from this estimate because of special local pricing, availability or pricing adjustments not reflected in the dealer's computer system. See salesperson for the most current information.

2026 F-750 Gas Regular Cab Base (F7A)

Price Level: 615

Available Options (cont'd)

Selected	Code	Description	MSRP
		This option releases 33K GVWR with 13.2K front suspension and 19.8K rear GAWR. For wheelbase range 158 thru 200 inches only.	
☐	HGF	VSO - 14K FRT AXLE F750 026 MD *This feature releases a 14K front axle and a 21K rear axle. This vehicle is limited to 33K GVWR. For 203 thru or 260 inch WBs only. Others WBs can be added on request.*	$1,230.00
☐	FCD	VSO - 164 WB 70 AF F7D 026 NO SHOCKS *70 inch AF on 164 in WB with hydraulic brakes but without rear shock absorbers.*	$797.00
☐	FMB	VSO - 3 Extra Keys 026 MD *Please note the 3 extra keys are not programmed by the assembly plant and must be programmed by the dealership to function.*	$293.00
☐	HFX	VSO - AGM BATT 2 900 CCA S5 026 MD *Selection 05: gas engine, 2 AGM battery 900CCA, total 1,800CC. Must be ordered with gas engine, with optional batteries 63B only.*	$354.00
☐	HFT	VSO - DEL V8 BADGES 026 MD *This option deletes the V8 badges on Medium Duty Trucks.*	$10.00
☐	HGB	VSO - ORG BELTS 30 70 AIR SEAT 26 MD *Orange seat belts, for air 30/70 driver and passenger seats only. Center belt remains black. Regular cab only.*	$110.00
☐	HGC	VSO - ORG BELTS AIR D FXD PASS 026 M *Orange seat belts, driver and passenger seats only. Center belt remains black. Regular cab only. 30/30 air driver seat, fixed passenger seat.*	$110.00
☐	HFZ	VSO - ORG BELTS OUTBRD RC 26 MD *Orange seat belts, driver and passenger seats only. Center belt remains black. Regular cab models only.*	$110.00
☐	HFY	VSO - ORG SEAT BELTS FXD OTR 026 MD *Orange seat belts, driver and passenger seats only 30 0 30, or 40 20 40 fixed seats.*	$110.00

Prices and content availability as shown are subject to change and should be treated as estimates only. Actual base vehicle, package and option pricing may vary from this estimate because of special local pricing, availability or pricing adjustments not reflected in the dealer's computer system. See salesperson for the most current information.

2026 F-750 Gas Regular Cab Base (F7A)

Price Level: 615

Selected Equip & Specs

Dimensions

- GCWR: 37,000 lbs.
- Rear brake diameter: 15.0"
- * **Vehicle body length: 314.0"**
- * **Vehicle body height: 95.2"**
- * **Turning radius (to curb): 27.0'**
- Rear track: 72.6"
- Rear tire outside width: 96.0"
- * **Frame section modulus: 20.1 cu.in.**
- * **Frame rail depth: 10.4"**
- Frame rail thickness: .4"
- Front bumper to front axle: 39.0"
- Leg room first-row: 41.4"
- Hip room first-row: 67.6"
- Front brake diameter: 15.0"
- Driver distance from axle: 54.4"
- Vehicle body width: 96.7"
- * **Wheelbase: 200.0"**
- Front track: 83.8"
- * **Cab to axle: 126.0"**
- * **Axle to end of frame: 75.0"**
- * **Frame yield strength (psi): 120000.0**
- * **Frame rail width: 3.7"**
- Frame rail section: 9.5"
- Headroom first-row: 40.7"
- Shoulder room first-row: 68.0"

Powertrain

- Spark ignition system
- Engine cylinders: V-8
- Horsepower: 335 HP@3750 RPM
- Radiator
- RNDM shift indicator
- TorqShift 6-speed automatic
- Recommended fuel: regular unleaded
- Standard rear differential
- 7.3L V-8 variable valve control, engine with 335HP
- Injection Type: sequential MPI
- Torque: 468 lb.-ft.@3750 RPM
- * **Auxiliary power take-off**
- 75 mph speed limiter
- Rear-wheel drive
- Low-speed ABS traction control

Fuel Economy and Emissions

- Federal emissions

Suspension and Handling

- Standard ride suspension
- Gas-pressurized front shock absorbers

Driveability

- Hydraulic disc brakes
- 4-wheel antilock (ABS) brakes
- Hill start assist
- Leaf spring front suspension
- Rigid axle rear suspension
- Hydraulic power-assist steering system
- 2-wheel steering system
- Front and rear ventilated disc brakes
- Four channel ABS brakes
- Rigid axle front suspension
- Tapered leaf front suspension
- Leaf spring rear suspension
- Re-circulating ball steering

Prices and content availability as shown are subject to change and should be treated as estimates only. Actual base vehicle, package and option pricing may vary from this estimate because of special local pricing, availability or pricing adjustments not reflected in the dealer's computer system. See salesperson for the most current information.

2026 F-750 Gas Regular Cab Base (F7A)

Price Level: 615

Selected Equip & Specs (cont'd)

Body Exterior

- Side assist steps
- Monotone paint
- Black door handles
- * **Chrome front bumper**
- Straight front bumper ends
- Hood mounted grille
- Trailer style side mirrors
- English measure truck 279/82R22.5 AS BSW front and rear tires
- White front wheels
- White rear wheels
- Disc rear wheel
- 2 doors
- Black side window trim
- Black windshield trim
- 2 front tow hooks
- * **Black grille with chrome surround**
- Convex spotter in driver and passenger side door mirrors
- Black door mirrors
- 22.5 x 8.25-inch front and dual rear wheels
- Steel front wheels
- Steel rear wheels

Convenience

- * **Power door locks with 2 stage unlocking**
- * **Auto-locking doors**
- * **Power first-row windows**
- Fixed rear windshield
- Standard glove box
- * **Driver and passenger door bins**
- Dashboard storage
- * **Upfitter switches**
- Steering column lever gearshift location
- * **Keyfob activated door locks**
- Cruise control with steering wheel mounted controls
- Driver foot rest
- Front beverage holders
- 2 beverage holders
- Instrument panel bin
- Trip computer
- Dual electric horn

Comfort

- Manual climate control
- Full headliner coverage
- Full floor coverage
- Manual tilting steering wheel
- Cloth headliner material
- Full vinyl floor covering
- Urethane steering wheel
- Manual telescopic steering wheel

Seats and Trim

- * **Seating capacity: 3**
- * **Front seat armrest storage**
- Folding driver seat back
- 4 driver seats way-direction
- * **40-20-40 benchfront seat**
- * **Mid passenger seat back**
- * **Front seat center armrest**
- * **40-20-40 bench front seat**
- * **Mid driver seat back**
- Manual fore/aft
- * **Folding passenger seat back**
- * **4 passenger seats way-direction**

Prices and content availability as shown are subject to change and should be treated as estimates only. Actual base vehicle, package and option pricing may vary from this estimate because of special local pricing, availability or pricing adjustments not reflected in the dealer's computer system. See salesperson for the most current information.

2026 F-750 Gas Regular Cab Base (F7A)

Price Level: 615

Selected Equip & Specs (cont'd)

- Manual fore/aft
- Vinyl front seat upholstery

Entertainment Features

- AM/FM stereo radio
- In-vehicle audio
- FM radio
- Auxiliary input jack
- Standard grade speakers
- Steering wheel mounted audio controls
- Fixed audio antenna
- AM/FM
- AM radio
- Seek scan
- External memory control
- Speakers number: 2
- Wireless audio streaming

Lighting, Visibility and Instrumentation

- Analog instrumentation display
- Digital clock
- Tachometer
- Engine/electric motor temperature gauge
- Transmission fluid temperature gauge
- Light tinted windows
- Halogen headlights
- Multiple enclosed headlights
- DRL preference setting
- Speed sensitive wipers
- Front reading lights
- Daytime running lights
- Delay interior courtesy lights
- Trip odometer
- Driver information center
- Oil pressure gauge
- Oil temperature gauge
- Engine hour meter
- Reflector headlights
- Auto on/off headlight control
- Delay-off headlights
- Variable intermittent front windshield wipers
- * **Illuminated entry**
- Variable instrument panel light
- Cab clearance lights

Technology and Telematics

- Bluetooth handsfree wireless device connectivity
- 1 USB port

Safety and Security

- Vehicle tracker
- Electronic stability control system
- * **Remote panic alarm**

Dimensions

General Weights

* **Curb weight**	**9,871 lbs.**
Front GAWR	12000 lbs.
GVWR	25999 lbs.
* **Rear curb weight**	**3,873 lbs.**
Rear GAWR	21000 lbs.
GCWR	37000 lbs.

Trailering Weights

GCWR	37,000 lbs.

Prices and content availability as shown are subject to change and should be treated as estimates only. Actual base vehicle, package and option pricing may vary from this estimate because of special local pricing, availability or pricing adjustments not reflected in the dealer's computer system. See salesperson for the most current information.

2026 F-750 Gas Regular Cab Base (F7A)

Price Level: 615

Selected Equip & Specs (cont'd)

Weights

Maximum GVWR	37,000 lbs.
* **Nominal RBM (in.-lbs.)**	**2,413,200 nominal RBM (in.-lbs.)**
* **Max RBM (in.-lbs.)**	**2,526,000 max RBM (in.-lbs.)**

Front Weights

* **Front curb weight**	**5,999 lbs.**
* **Spring rating front**	**13,200 lbs.**
* **Axle capacity front**	**12,000 lbs.**
Tire/wheel capacity front	13,220 lbs.

Rear Weights

Axle capacity rear	21,000 lbs.
Tire/wheel capacity rear	24,040 lbs.
* **Spring rating rear**	**23,000 lbs.**

Exterior Measurements

* **Vehicle body length**	**314.0"**
* **Vehicle body height**	**95.2"**
Front brake diameter	15.0"
Rear brake diameter	15.0"
* **Rear frame height loaded**	**36.8"**
* **Turning radius (to bumper)**	**28.6'**
Width - mirrors extended	121.9"
Rear track	72.6"
* **Turning radius (to curb)**	**27.0'**
Rear tire outside width	96.0"
* **Frame section modulus**	**20.1 cu.in.**
* **Frame rail depth**	**10.4"**
Frame rail thickness	.4"
Front bumper to front axle	39.0"
Vehicle body width	96.7"
* **Wheelbase**	**200.0"**
* **Front frame height loaded**	**35.3"**
* **Front frame height unloaded**	**37.4"**
* **Rear frame height unloaded**	**38.2"**
Width - mirrors folded	90.7"
Front track	83.8"
Driver distance from axle	54.4"
* **Cab to axle**	**126.0"**
* **Axle to end of frame**	**75.0"**
* **Frame yield strength (psi)**	**120000.0**
* **Frame rail width**	**3.7"**
Frame rail section	9.5"

Headroom

Headroom first-row	40.7"

Legroom

Leg room first-row	41.4"

Shoulder Room

Shoulder room first-row	68.0"

Hip Room

Hip room first-row	67.6"

Front And Rear GAWR Total Will Exceed Overall GVWR

Prices and content availability as shown are subject to change and should be treated as estimates only. Actual base vehicle, package and option pricing may vary from this estimate because of special local pricing, availability or pricing adjustments not reflected in the dealer's computer system. See salesperson for the most current information.

2026 F-750 Gas Regular Cab Base (F7A)

Price Level: 615

Selected Equip & Specs (cont'd)

Powertrain

Engine

Engine	7.3L V-8 variable valve control, engine with 335HP
Engine cylinders	V-8
Engine location	Front mounted engine
Engine mounting direction	Longitudinal mounted engine
Cylinder head material	Aluminum cylinder head
Valves per cylinder	2
Injection type	sequential MPI
Ignition	Spark ignition system
Engine block material	Iron engine block

Engine Specs

Displacement	7.3L
cc	445 cu.in.
Bore	4.22"
Stroke	3.98"
Compression ratio	10.5

Engine Power

Horsepower	335 HP@3750 RPM
Torque	468 lb.-ft.@3750 RPM

Alternator

Alternator amps	210A
Alternator type	Heavy-duty alternator

Battery

Battery type	Lead acid battery
Battery rating	900CCA
Battery step	Battery step
Battery location	Battery location forward right
Battery run down protection	Battery run down protection

Engine Extras

Radiator	Radiator
* **Auxiliary power take-off**	**Auxiliary power take-off**
Shift indicator	RNDM shift indicator

Transmission

Transmission	TorqShift 6-speed automatic
Transmission electronic control	Transmission electronic control
Speed limiter	75 mph speed limiter
Overdrive transmission	Overdrive transmission
Lock-up transmission	Lock-up transmission
First gear ratio	3.974
Second gear ratio	2.318
Third gear ratio	1.516
Fourth gear ratio	1.149
Fifth gear ratio	0.858
Sixth gear ratio	0.674
Reverse gear ratio	3.128
Stall ratio	2
Selectable mode transmission	Tow/Haul Mode selectable mode transmission
Transmission oil cooler	Transmission oil cooler
* **PTO transmission provision**	**PTO transmission provision**

Prices and content availability as shown are subject to change and should be treated as estimates only. Actual base vehicle, package and option pricing may vary from this estimate because of special local pricing, availability or pricing adjustments not reflected in the dealer's computer system. See salesperson for the most current information.

2026 F-750 Gas Regular Cab Base (F7A)

Price Level: 615

Selected Equip & Specs (cont'd)

Drive Type

Drive type ..... Rear-wheel drive

Drivetrain

* **Axle ratio** **6.5**
Axle speed ..... Single axle speed

Exhaust

Tailpipe ..... Non stainless steel single exhaust
Additional muffler location ..... right
Additional tailpipe location ..... right
Additional muffler type ..... horizontal
Additional tailpipe type ..... horizontal

Fuel

Fuel type ..... regular unleaded

Fuel Tank

Front left fuel tank shape ..... rectangular
Front left fuel tank capacity ..... 50.01 US gallons

Drive Feature

Traction control ..... Low-speed ABS traction control
Differential ..... Standard rear differential

Fuel Economy and Emissions

Emissions

Emissions ..... Federal emissions

Suspension and Handling

Suspension

Suspension ..... Standard ride suspension
Front shock absorbers ..... Gas-pressurized front shock absorbers

Driveability

Brakes

Brake type ..... Hydraulic disc brakes
Ventilated brakes ..... Front and rear ventilated disc brakes
ABS brakes ..... Four channel ABS brakes
ABS brakes ..... 4-wheel antilock (ABS) brakes

Brake Assistance

Hill start assist ..... Hill start assist

Front Suspension

Suspension ride type front ..... Rigid axle front suspension
Suspension type front ..... Leaf spring front suspension

Front Spring

Regular front springs ..... Regular front springs
Springs front ..... Tapered leaf front suspension

Rear Spring

Prices and content availability as shown are subject to change and should be treated as estimates only. Actual base vehicle, package and option pricing may vary from this estimate because of special local pricing, availability or pricing adjustments not reflected in the dealer's computer system. See salesperson for the most current information.

2026 F-750 Gas Regular Cab Base (F7A)

Price Level: 615

Selected Equip & Specs (cont'd)

Springs rear ..... Multi-leaf rear suspension
Rear springs ..... Regular grade rear springs
Auxiliary rear spring ..... Rubber auxiliary rear spring

Rear Suspension

Suspension type rear ..... Leaf spring rear suspension
Suspension ride type rear ..... Rigid axle rear suspension

Steering

Steering ..... Hydraulic power-assist steering system
Steering type ..... Re-circulating ball steering
Steering type number of wheels ..... 2-wheel steering system

Exterior

Front Wheels

Front wheels diameter ..... 22.5"
Front wheels width ..... 8.3"

Rear Wheels

Rear wheels diameter ..... 22.5"
Rear wheels width ..... 8.3"

Front And Rear Wheels

Appearance ..... none

Front Tires

Aspect 82
Diameter ..... 22.5"
Sidewalls ..... BSW
Tread ..... AS
Type ..... english measure truck tire
Width 279mm
Front wheel - RPM 497

Rear Tires

Aspect 82
Diameter ..... 22.5"
Sidewalls ..... BSW
Tread ..... AS
Type ..... english measure truck tire
Width 279mm
Rear wheel - RPM 497

Body Exterior

Exterior Features

Number of doors ..... 2 doors
Side steps ..... Side assist steps
Front splash guards ..... Front splash guards

Frame

Clean CA frame ..... Clean CA frame

Body

Body panels ..... Composite and galvanized steel body panels

Mirrors

Prices and content availability as shown are subject to change and should be treated as estimates only. Actual base vehicle, package and option pricing may vary from this estimate because of special local pricing, availability or pricing adjustments not reflected in the dealer's computer system. See salesperson for the most current information.

2026 F-750 Gas Regular Cab Base (F7A)

Price Level: 615

Selected Equip & Specs (cont'd)

Convex spotter ..... Convex spotter in driver and passenger side door mirrors

Tires

Front tires LT load rating ..... H

Rear tires LT load rating ..... H

Wheels

Front wheel type ..... Disc front wheel

Dual rear wheels ..... Dual rear wheels

Number of front wheel studs ..... 10 front wheel studs

Number of rear wheel studs ..... 10 rear wheel studs

Convenience

Door Locks

* **Door locks ..... Power door locks with 2 stage unlocking**
* **Keyfob door locks ..... Keyfob activated door locks**
* **Auto door locks ..... Auto-locking doors**

Cruise Control

Cruise control ..... Cruise control with steering wheel mounted controls

Exterior Mirrors

Folding door mirrors ..... Manual folding door mirrors

Heated door mirrors ..... Heated driver and passenger side door mirrors

Front Side Windows

* **First-row windows ..... Power first-row windows**

Passenger Visor

Visor passenger mirror ..... Passenger visor mirror

Power Outlets

12V power outlets ..... 2 12V power outlets

* **120V AC power outlets ..... 1 120V AC power outlet**

Pedals

Driver foot rest ..... Driver foot rest

Rear Windshield

Rear windshield ..... Fixed rear windshield

Storage

* **Door bins front ..... Driver and passenger door bins**

Number of beverage holders ..... 2 beverage holders

Beverage holders ..... Front beverage holders

Glove box ..... Standard glove box

Instrument panel storage ..... Instrument panel bin

Dashboard storage ..... Dashboard storage

Windows Feature

Prices and content availability as shown are subject to change and should be treated as estimates only. Actual base vehicle, package and option pricing may vary from this estimate because of special local pricing, availability or pricing adjustments not reflected in the dealer's computer system. See salesperson for the most current information.

2026 F-750 Gas Regular Cab Base (F7A)

Price Level: 615

Selected Equip & Specs (cont'd)

* **One-touch up window** **Driver and passenger one-touch up windows**
* **One-touch down window** **Driver and passenger one-touch down windows**

Miscellaneous

Trip computer ..... Trip computer
Gearshift location ..... Steering column lever gearshift location
* **Upfitter switches** ..... **Upfitter switches**
Horn ..... Dual electric horn

Comfort

Climate Control

Climate control ..... Manual climate control

Headliner

Headliner material ..... Cloth headliner material
Headliner coverage ..... Full headliner coverage

Floor Trim

Floor covering ..... Full vinyl floor covering
Floor coverage ..... Full floor coverage

Steering Wheel

Steering wheel material ..... Urethane steering wheel
Steering wheel telescopic Manual telescopic steering wheel
Steering wheel tilt ..... Manual tilting steering wheel

Seats and Trim

Seat Capacity

* **Seating capacity** **3**

Front Seats

* **Front seat type** ..... **40-20-40 bench front seat**
* **Front seat type** ..... **40-20-40 benchfront seat**
Driver seat back ..... Folding driver seat back
* **Driver seat back type** ..... **Mid driver seat back**
Driver seats way-direction 4 driver seats way-direction
Driver seat fore/aft ..... Manual fore/aft
* **Passenger seat back** **Folding passenger seat back**
* **Passenger seat back type** ..... **Mid passenger seat back**
* **Passenger seats way-direction** **4 passenger seats way-direction**
Passenger seat fore/aft ..... Manual fore/aft
* **Armrests front center** ..... **Front seat center armrest**
* **Armrests front storage** **Front seat armrest storage**

Front Seat Trim

Front seat upholstery ..... Vinyl front seat upholstery
Front seatback upholstery ..... Carpet front seatback upholstery

Gearshifter Material

Gearshifter material ..... Urethane gear shifter material

Prices and content availability as shown are subject to change and should be treated as estimates only. Actual base vehicle, package and option pricing may vary from this estimate because of special local pricing, availability or pricing adjustments not reflected in the dealer's computer system. See salesperson for the most current information.

2026 F-750 Gas Regular Cab Base (F7A)

Price Level: 615

Selected Equip & Specs (cont'd)

Entertainment Features

Radio Features

Aux input jack	Auxiliary input jack	External memory	External memory control
Seek scan	Seek scan		

Speakers

Speakers	Standard grade speakers	Speakers number	2

Audio Features

Steering mounted audio control	Steering wheel mounted audio controls	Wireless streaming	Wireless audio streaming

Lighting, Visibility and Instrumentation

Instrumentation

Trip odometer	Trip odometer	Instrumentation display	Analog instrumentation display

Instrumentation Displays

Driver information center	Driver information center	Clock	Digital clock

Instrumentation Gauges

Tachometer	Tachometer	Oil pressure gauge	Oil pressure gauge
Oil temperature gauge	Oil temperature gauge	Transmission temperature gauge	Transmission fluid temperature gauge
Engine/electric motor temperature gauge	Engine/electric motor temperature gauge	Engine hour meter	Engine hour meter

Instrumentation Warnings

Oil pressure warning	Oil pressure warning	Low fuel warning	Low fuel warning
Low brake fluid warning	Low brake fluid warning	Battery charge warning	Battery charge warning
Headlights on reminder	Headlights on reminder	Key in vehicle warning	Key in vehicle warning
Door ajar warning	Door ajar warning	Service interval warning	Service interval indicator
Transmission fluid temperature warning	Transmission fluid temp warning		

Glass

Tinted windows	Light tinted windows

Headlights

Headlights	Halogen headlights	Headlight type	Reflector headlights
Auto headlights	Auto on/off headlight control	Multiple headlights	Multiple enclosed headlights
Delay off headlights	Delay-off headlights	DRL preference setting	DRL preference setting

Front Windshield

Wipers	Variable intermittent front windshield wipers	Speed sensitive wipers	Speed sensitive wipers

Prices and content availability as shown are subject to change and should be treated as estimates only. Actual base vehicle, package and option pricing may vary from this estimate because of special local pricing, availability or pricing adjustments not reflected in the dealer's computer system. See salesperson for the most current information.

2026 F-750 Gas Regular Cab Base (F7A)

Price Level: 615

Selected Equip & Specs (cont'd)

Interior Lighting

- **Illuminated entry** ..... **Illuminated entry**
- Front reading lights ..... Front reading lights
- Variable panel light ..... Variable instrument panel light

Lights

- Running lights ..... Daytime running lights
- Clearance lights ..... Cab clearance lights
- Interior courtesy lights ..... Delay interior courtesy lights

Technology and Telematics

Connectivity

- Handsfree ..... Bluetooth handsfree wireless device connectivity

USB Ports

- USB ports ..... 1 USB port

Safety and Security

Security System

- **Remote panic alarm** ..... **Remote panic alarm**
- Vehicle tracker ..... Vehicle tracker

Traction Control

- Electronic stability control ..... Electronic stability control system

Prices and content availability as shown are subject to change and should be treated as estimates only. Actual base vehicle, package and option pricing may vary from this estimate because of special local pricing, availability or pricing adjustments not reflected in the dealer's computer system. See salesperson for the most current information.

2026 F-750 Gas Regular Cab Base (F7A)

Price Level: 615

Vehicle Dimension and Performance Summary

Performance predictions in this report represent an estimate of vehicle performance based on standard operating conditions. Variations in customer equipment, load configuration, ambient conditions, and/or operator driving techniques can cause significant variations in vehicle performance. These values are not representative of results that may be shown in actual dynamometer tests. This report should therefore be used as a guide for comparative vehicle performance.

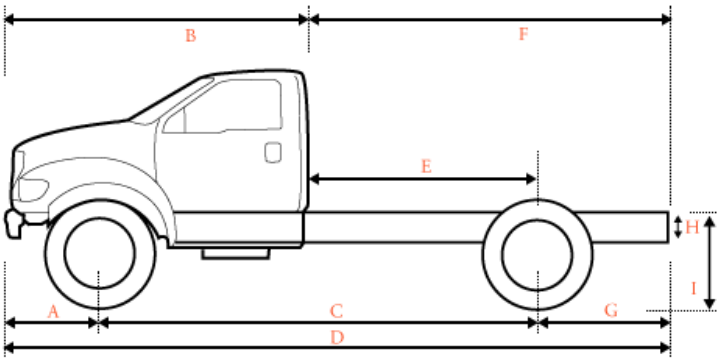

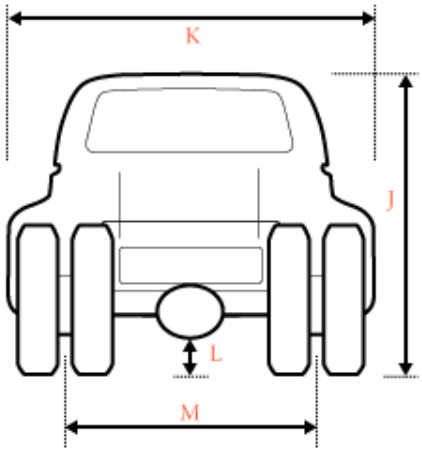

Dimensions

A	Front of Bumper to Front Axle	39.00 in.
B	Front Bumper to Back of Cab (BBC)	113.00 in.
C	Wheelbase (WB)	200.00 in.
D	Overall Length (OAL)	314.00 in.
E	Back of Cab to Rear Axle (CA)	126.00 in.
F	Back of Cab to End of Frame	201.00 in.
G	Rear Axle to End of Frame (AF)	75.00 in.
H	Frame Section Height	10.40 in.
I	Rear Frame Height Unloaded	38.20 in.
I	Rear Frame Height Loaded	36.80 in.
J	Cab Height	95.20 in.
K	Body Width	96.70 in.
L	Maximum Ground Clearance	N/A
L	Minimum Ground Clearance	N/A
M	Front Tread	83.80 in.
M	Rear Tread	72.60 in.

Prices and content availability as shown are subject to change and should be treated as estimates only. Actual base vehicle, package and option pricing may vary from this estimate because of special local pricing, availability or pricing adjustments not reflected in the dealer's computer system. See salesperson for the most current information.

2026 F-750 Gas Regular Cab Base (F7A)

Price Level: 615

Vehicle Dimension and Performance Summary (cont'd)

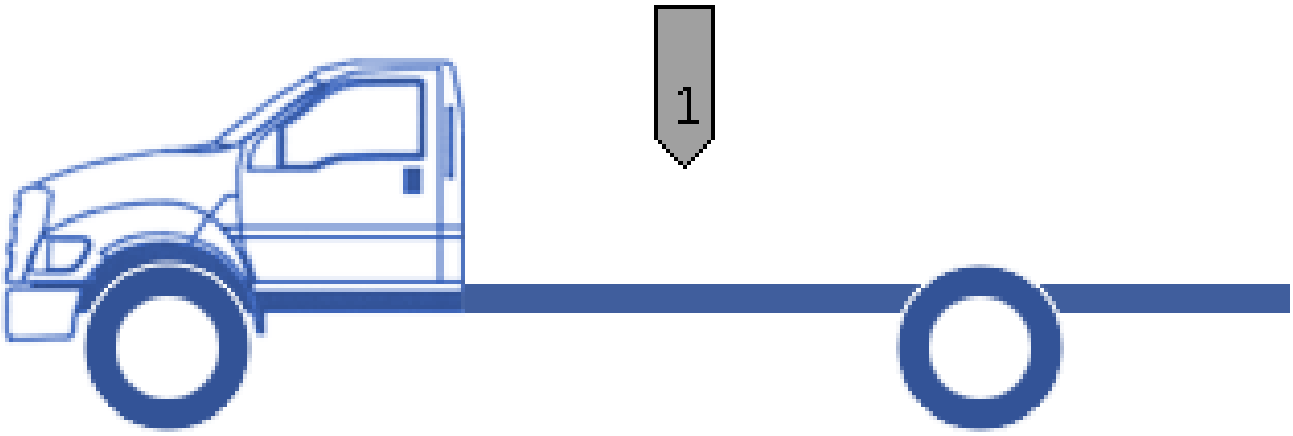

Weight

Licensing

GVWR does not exceed 26,000 lbs and may not require a Commercial Driver's License (CDL). Contact your local state commercial driver licensing office for specifics on what your state requires.

GVW	Front Axle	Rear Axle	Totals
Chassis	5,999 lbs	3,873 lbs	9,872 lbs
Body	0 lbs	0 lbs	0 lbs
Occupants Weight	200 lbs	100 lbs	300 lbs
1 Max Payload - (Max Payload)	5,801 lbs	17,027 lbs	22,828 lbs
TOTAL	**12,000 lbs**	**21,000 lbs**	**33,000 lbs**

Ratings	Front Axle	Rear Axle	GVWR
GAWR	**12,000 lbs**	**21,000 lbs**	**25,999 lbs**
Wheels/Tires	13,220 lbs	24,040 lbs	
Suspension	13,200 lbs	23,000 lbs	
Axle	12,000 lbs	21,000 lbs	
Legal Axle Limit	0 lbs	0 lbs	

Front And Rear GAWR Total Will Exceed Overall GVWR

Prices and content availability as shown are subject to change and should be treated as estimates only. Actual base vehicle, package and option pricing may vary from this estimate because of special local pricing, availability or pricing adjustments not reflected in the dealer's computer system. See salesperson for the most current information.

2026 F-750 Gas Regular Cab Base (F7A)

Price Level: 615

Vehicle Dimension and Performance Summary (cont'd)

Start, Grade and Speed

Shift Indicator

Vehicle equipped **without** *Park Pawl. Shift indicator will display* **RNDM.**

Start	Ratio	Desired	Calculated
Start grade capability in 1st gear	3.97	15.00 %	21.60 %
Start grade capability in reverse	3.13	15.00 %	17.00 %

Grade	Ratio	Desired	Calculated
Maximum grade in 4th gear	1.15	3.00 %	6.24 %
Maximum grade in 5th gear	0.86	3.00 %	4.66 %
Maximum grade in 6th gear	0.67	3.00 %	3.66 %

Speed	Desired	Calculated
Top Speed (level grade)	75 mph	103 mph
To meet your requirement you need a maximum axle ratio of 10.75		
Top Speed on 3% grade	55 mph	
To meet your requirement you need a maximum of 166 hp		
Cruise Speed	60 mph	72 mph
Engine RPM at desired cruise speed		2,177 rpm

Variables in Use

Start

Rear axle ratio:	6.50	Clutch engagement torque:	234 ft.lbs.
Tire size:	11R22.5 (497 rev/mile)	Torque conversion ratio:	2.00
Gross Vehicle Weight (GVW):	25,999 lbs		

Grade

Rear axle ratio:	6.50	Gross Vehicle Weight (GVW):	25,999 lbs
Tire size:	11R22.5 (497 rev/mile)	Peak engine torque:	468 ft.lbs.

Speed

Engine Power:	335 hp @ 3,750 rpm	Worst road surface	Typical Highway
Peak Torque RPM:	3,750 rpm	Final Drive Ratio:	0.67
Frontal Area:	57.89 ft²	Drag Coefficient	0.80
Cruising RPM	2,600 rpm		

Prices and content availability as shown are subject to change and should be treated as estimates only. Actual base vehicle, package and option pricing may vary from this estimate because of special local pricing, availability or pricing adjustments not reflected in the dealer's computer system. See salesperson for the most current information.

2026 F-750 Gas Regular Cab Base (F7A)

Price Level: 615

Vehicle Dimension and Performance Summary (cont'd)

Turning Radius

Turning radius to curb:	27.00 ft
Turning radius to bumper:	28.61 ft

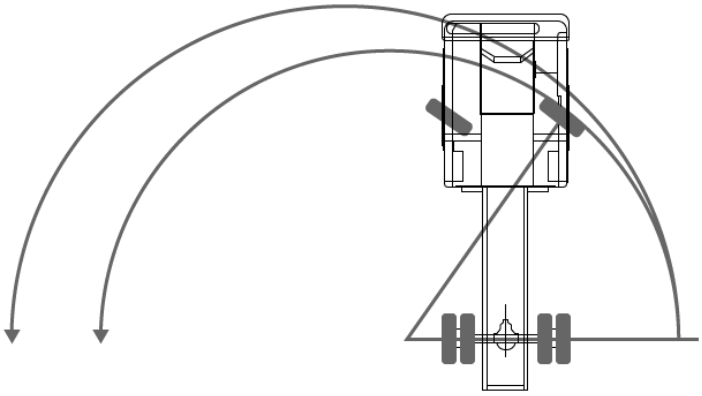

Prices and content availability as shown are subject to change and should be treated as estimates only. Actual base vehicle, package and option pricing may vary from this estimate because of special local pricing, availability or pricing adjustments not reflected in the dealer's computer system. See salesperson for the most current information.

2026 F-750 Gas Regular Cab Base (F7A)

Price Level: 615

Warranty

Standard Warranty

Basic Warranty

Basic warranty	24 months/unlimited

Powertrain Warranty

Powertrain warranty	60 months/100,000 miles

Corrosion Perforation

Corrosion perforation warranty	36 months/unlimited

Roadside Assistance Warranty

Roadside warranty	24 months/unlimited

Frame Rail Warranty

Frame Rail Warranty	60 months/unlimited

Prices and content availability as shown are subject to change and should be treated as estimates only. Actual base vehicle, package and option pricing may vary from this estimate because of special local pricing, availability or pricing adjustments not reflected in the dealer's computer system. See salesperson for the most current information.